5570M PARTS LIST

Revised 07/18/07

GBC IS AN ACCO BRANDS COMPANY

CROSS / CUT 2x15mm

Mod.5570M

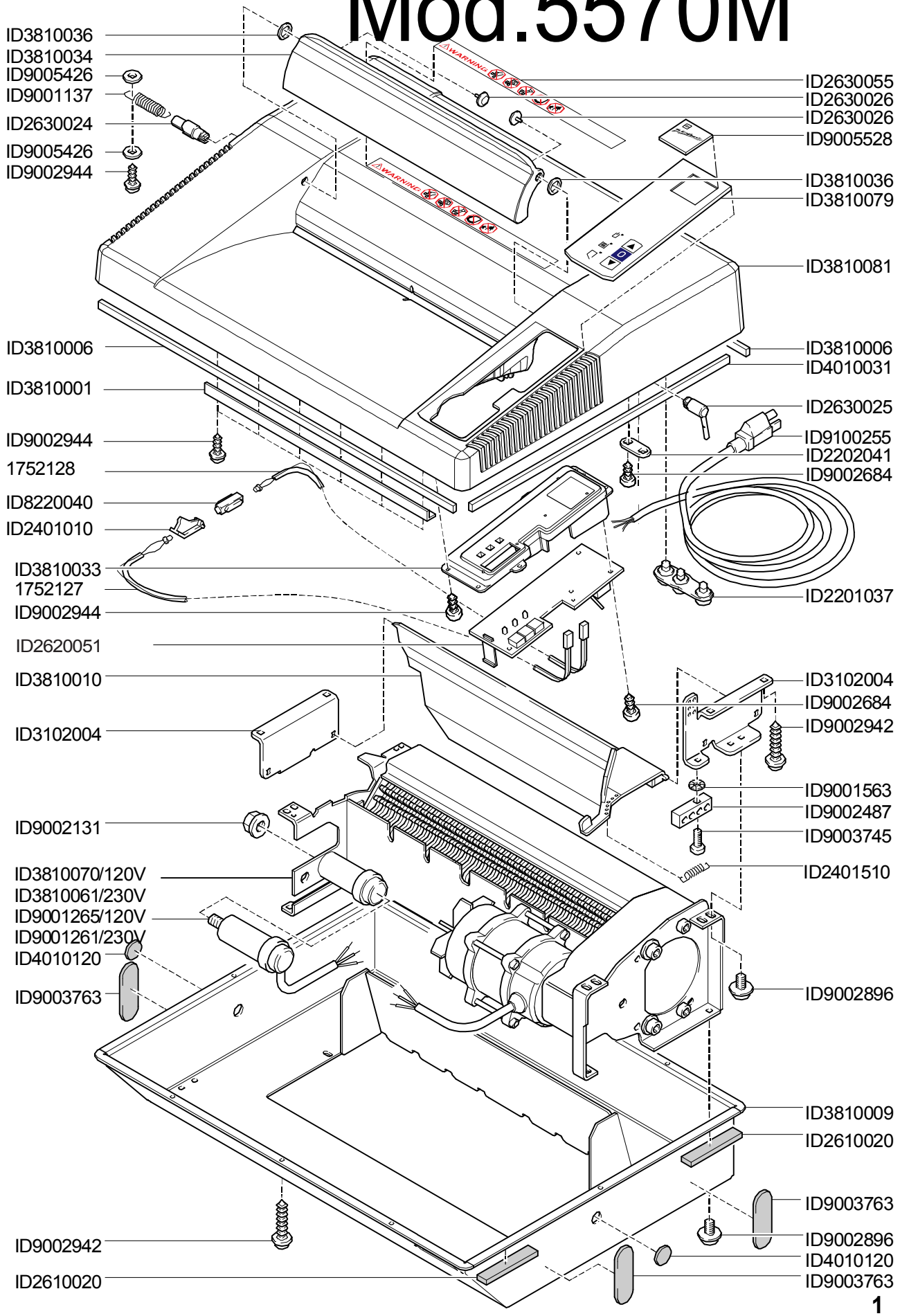

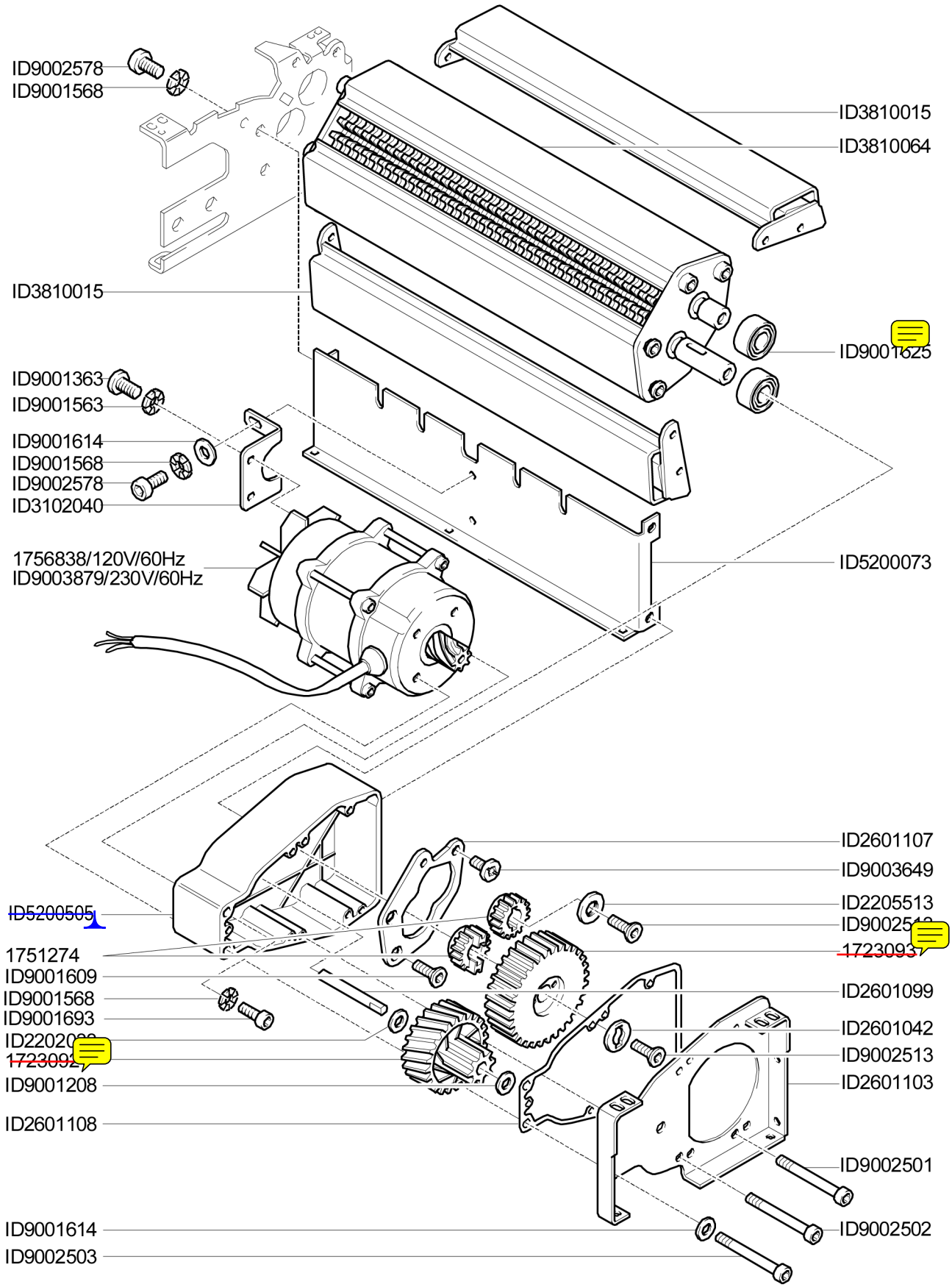
ID9002578
ID9001568
ID3810015
ID3810064
ID3810015
ID9001625
ID9001363
ID9001563
ID9001614
ID9001568
ID9002578
ID3102040
1756838/120V/60Hz
ID9003879/230V/60Hz
ID5200073
ID2601107
ID9003649
ID2205513
ID5200505
1751274
ID9001609
ID9001568
ID9001693
ID9001208
ID2601108
ID2601099
ID2601042
ID9002513
ID2601103
ID9002501
ID9001614
ID9002503
ID9002502

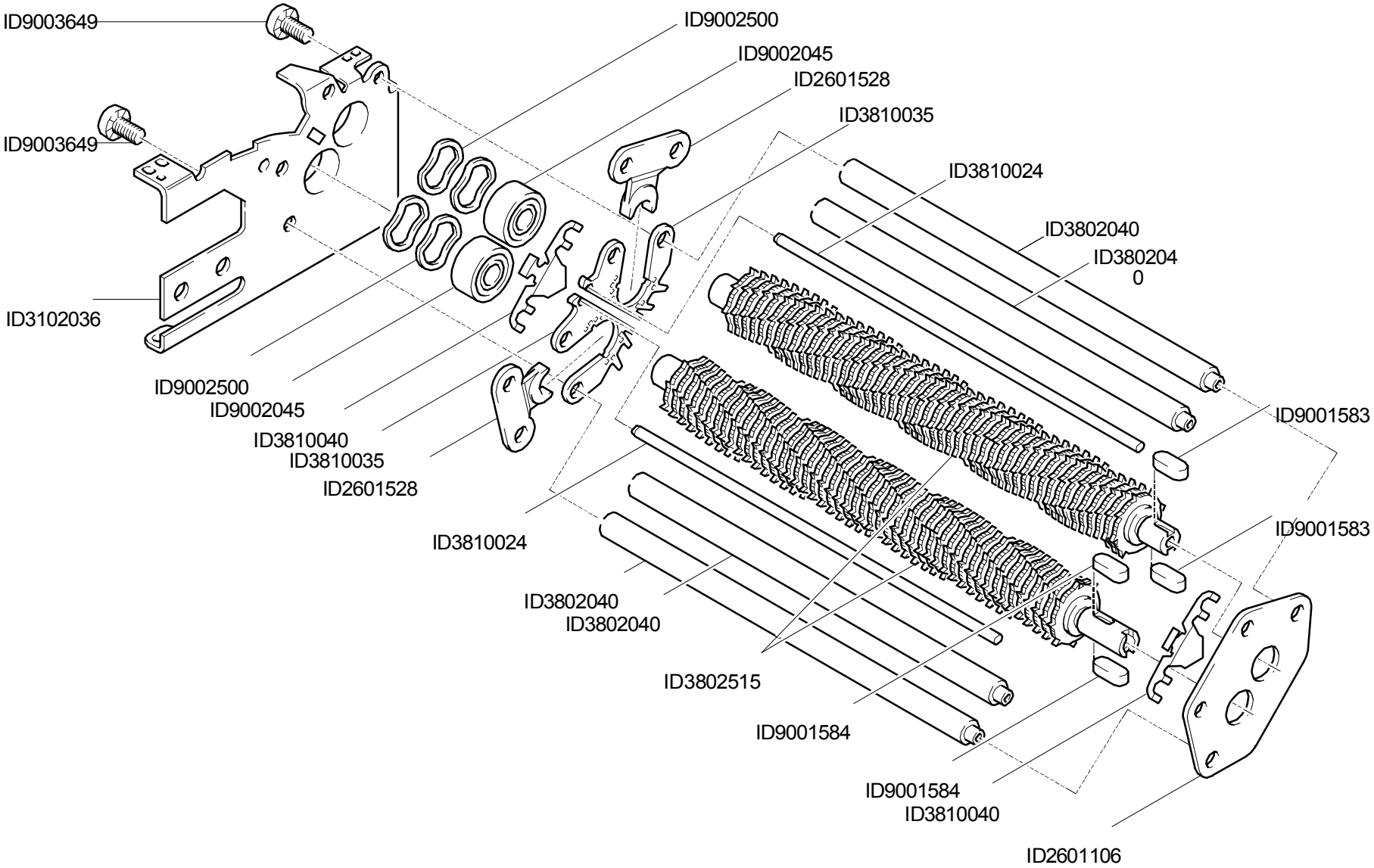
ID9003649
ID9003649
ID3102036
ID9002500
ID9002045
ID3810040
ID3810035
ID2601528
ID3810024
ID3802040
ID3802040
ID3802515
ID9001584
ID9001584
ID3810040
ID2601106
ID9002500
ID9002045
ID2601528
ID3810035
ID3810024
ID3802040
ID3802040
0
ID9001583
ID9001583

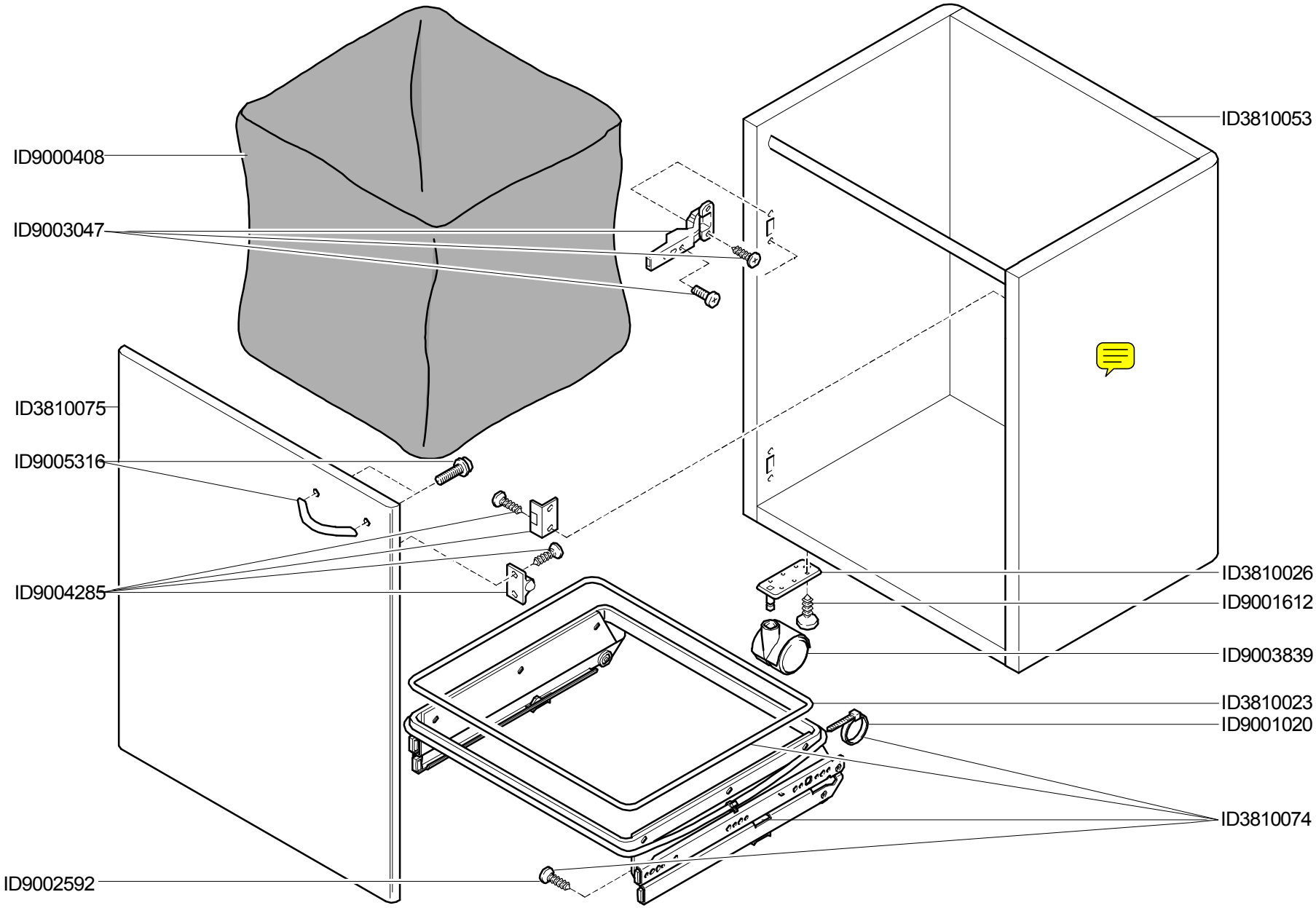
ID3810053
ID9000408
ID9003047
ID3810075
ID9005316
ID9004285
ID3810026
ID9001612
ID9003839
ID3810023
ID9001020
ID3810074
ID9002592

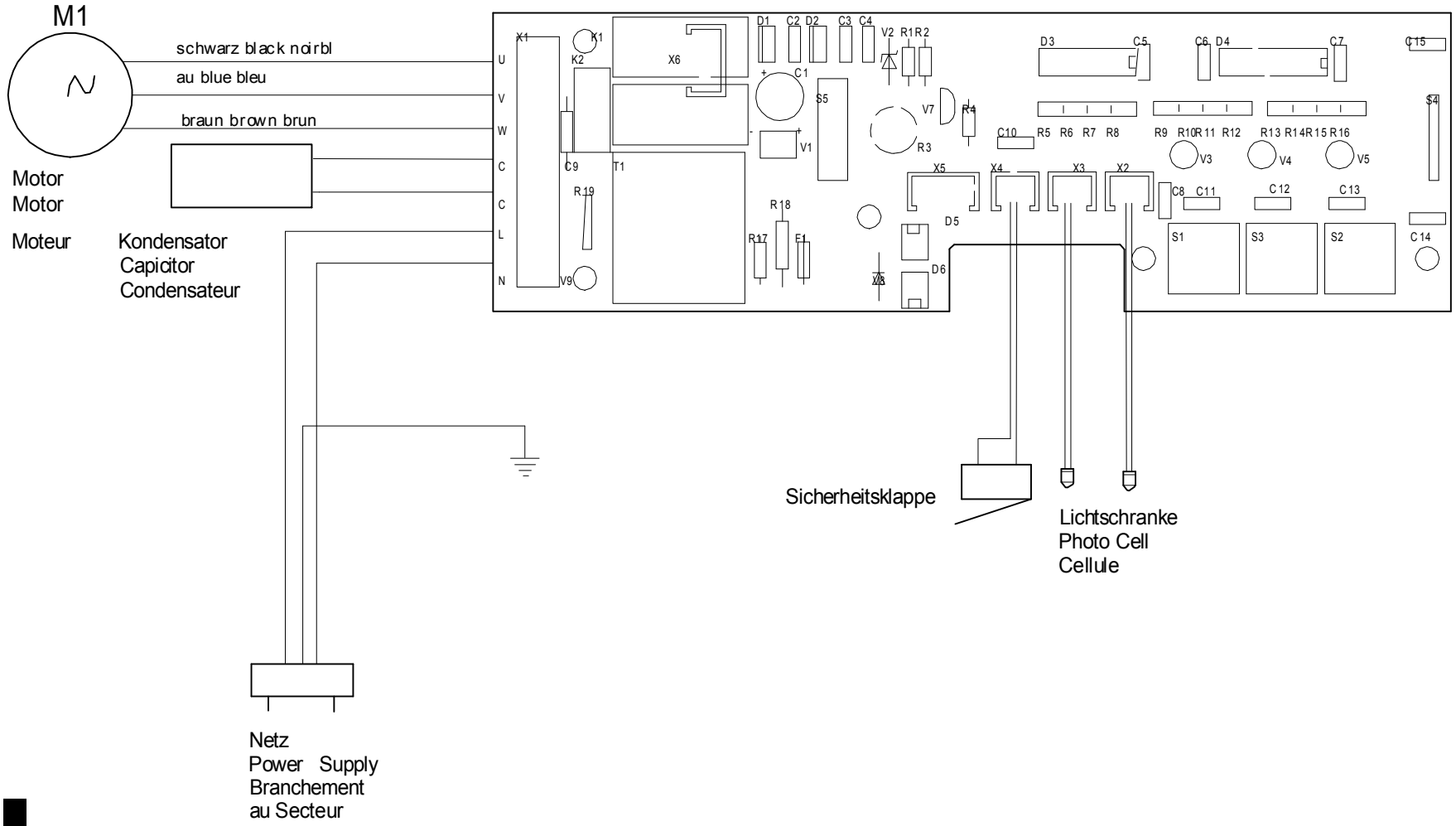
M1
schwarz black noirbl
au blue bleu
braun brown brun
Motor
Motor
Moteur
Kondensator
Capicitor
Condensateur
U
V
W
C
C
L
N
X1
K1
K2
X6
C9
T1
R19
V9
D1
C2
D2
C3
C4
V2
R1
R2
C1
S5
V1
V7
R4
R3
X5
X4
X3
X2
D5
D6
R18
R17
F1
D3
C5
C6
D4
C7
C15
C10
R5
R6
R7
R8
R9
R10
R11
R12
R13
R14
R15
R16
V3
V4
V5
C8
C11
C12
C13
S4
S1
S3
S2
C14
Sicherheitsklappe
Lichtschranke
Photo Cell
Cellule
Netz
Power Supply
Branchement
au Secteur

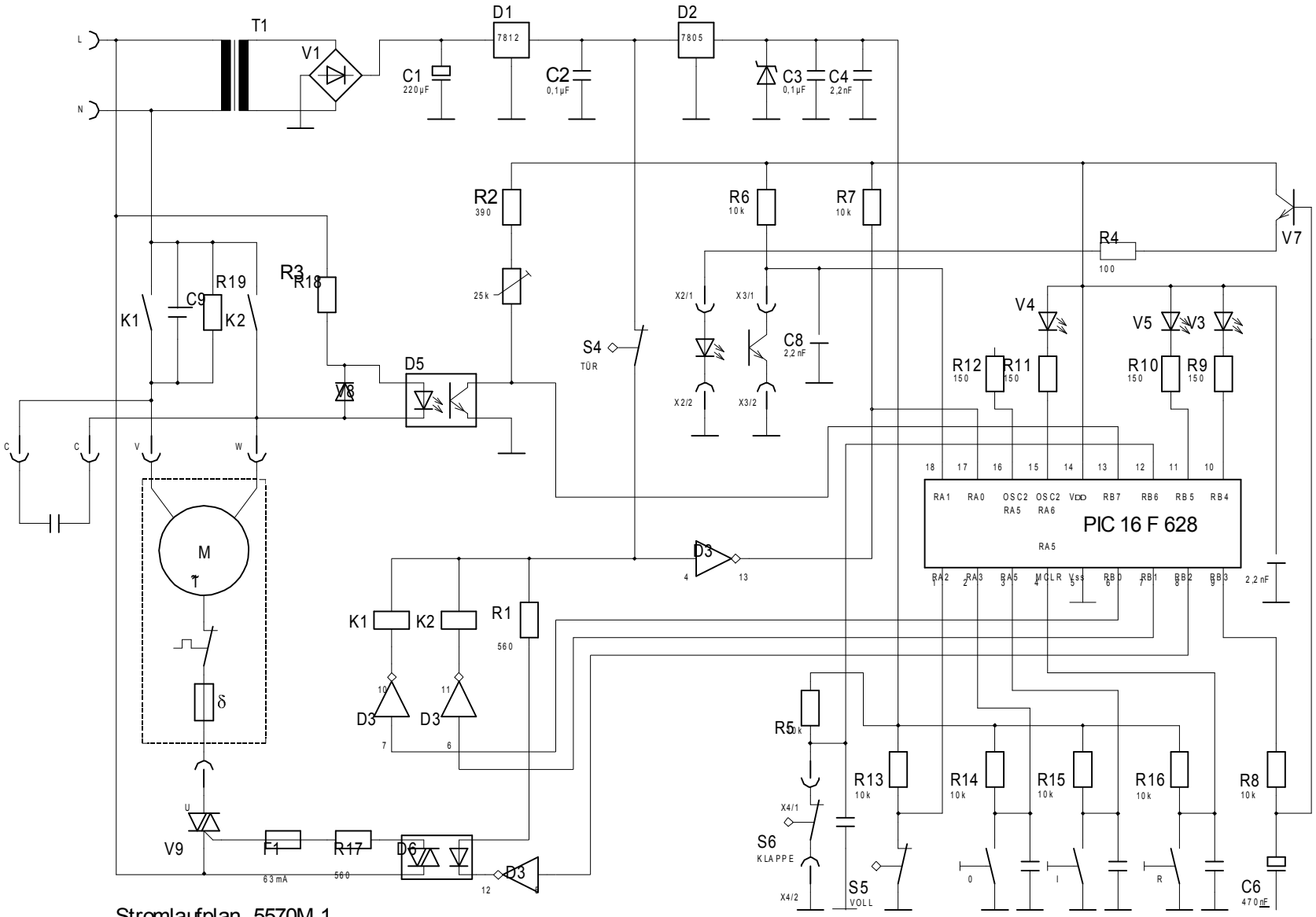

Stromlaufplan 5570M-1
schema de
circuit électrique 5570M-1
wiring diagram 5570M-1