4500S PARTS LIST

Revised 04/18/06

GBC IS AN ACCO BRANDS COMPANY

Mod.4500S

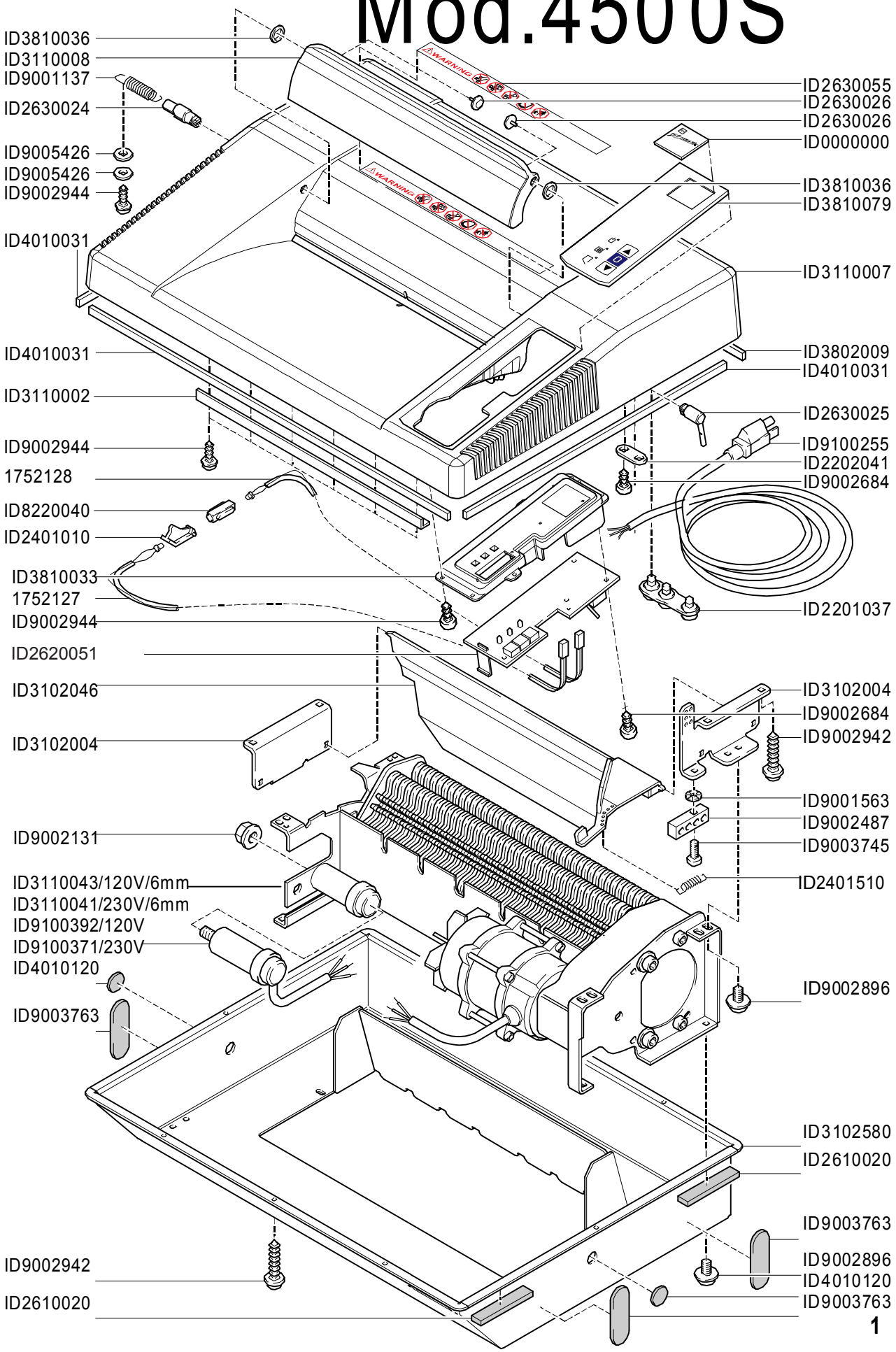
ID3810036
ID3110008
ID9001137
ID2630024
ID9005426
ID9005426
ID9002944
ID4010031
ID4010031
ID3110002
ID9002944
1752128
ID8220040
ID2401010
ID3810033
1752127
ID9002944
ID2620051
ID3102046
ID3102004
ID9002131
ID3110043/120V/6mm
ID3110041/230V/6mm
ID9100392/120V
ID9100371/230V
ID4010120
ID9003763
ID9002942
ID2610020
ID2630055
ID2630026
ID2630026
ID0000000
ID3810036
ID3810079
ID3110007
ID3802009
ID4010031
ID2630025
ID9100255
ID2202041
ID9002684
ID2201037
ID3102004
ID9002684
ID9002942
ID9001563
ID9002487
ID9003745
ID2401510
ID9002896
ID3102580
ID2610020
ID9003763
ID9002896
ID4010120
ID9003763

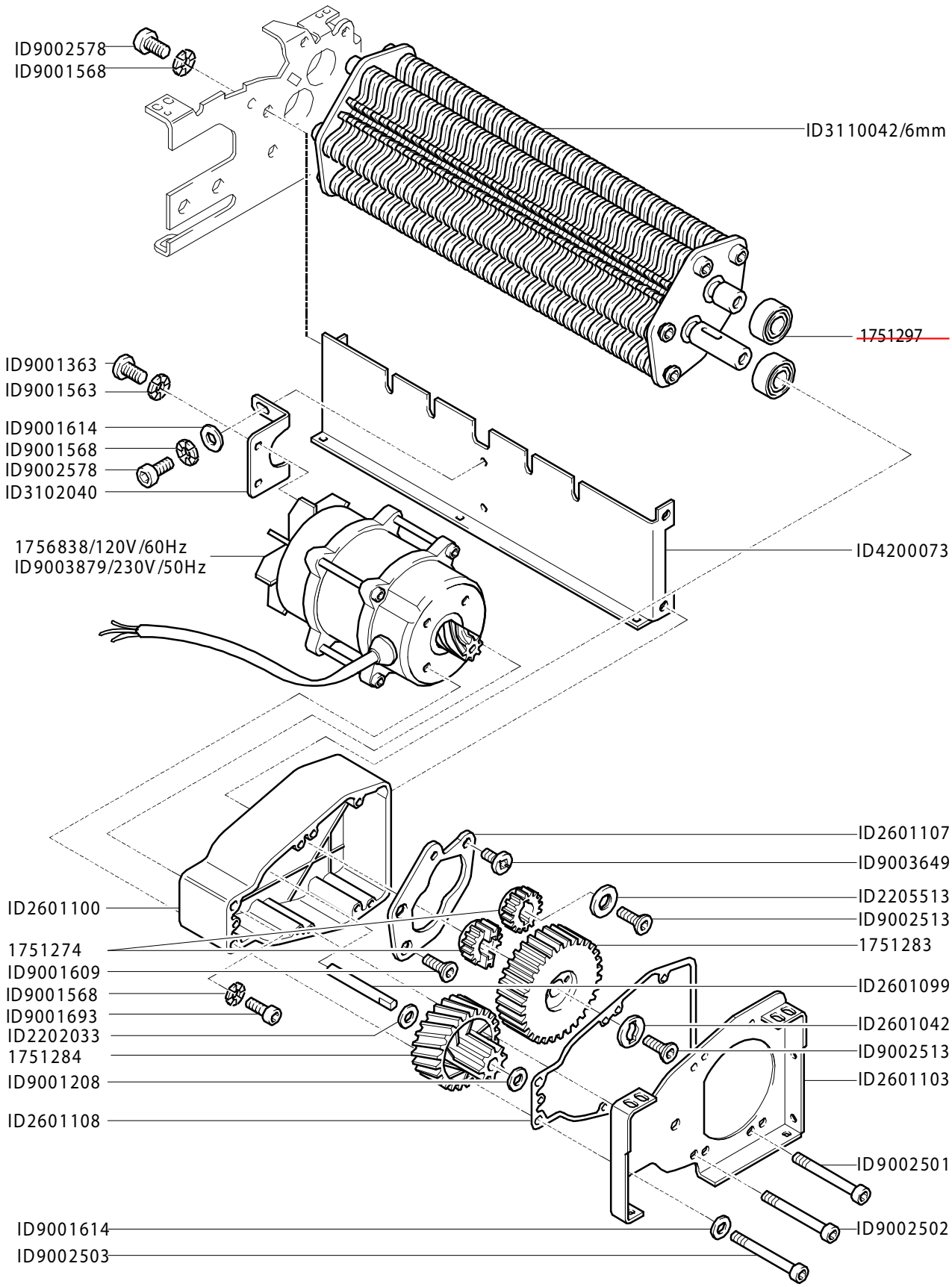
ID9002578
ID9001568
ID3110042/6mm
1751297
ID9001363
ID9001563
ID9001614
ID9001568
ID9002578
ID3102040
1756838/120V/60Hz
ID9003879/230V/50Hz
ID4200073
ID2601107
ID9003649
ID2205513
ID9002513
ID2601100
1751274
1751283
ID9001609
ID9001568
ID9001693
ID2202033
1751284
ID9001208
ID2601099
ID2601042
ID9002513
ID2601103
ID2601108
ID9002501
ID9001614
ID9002502
ID9002503

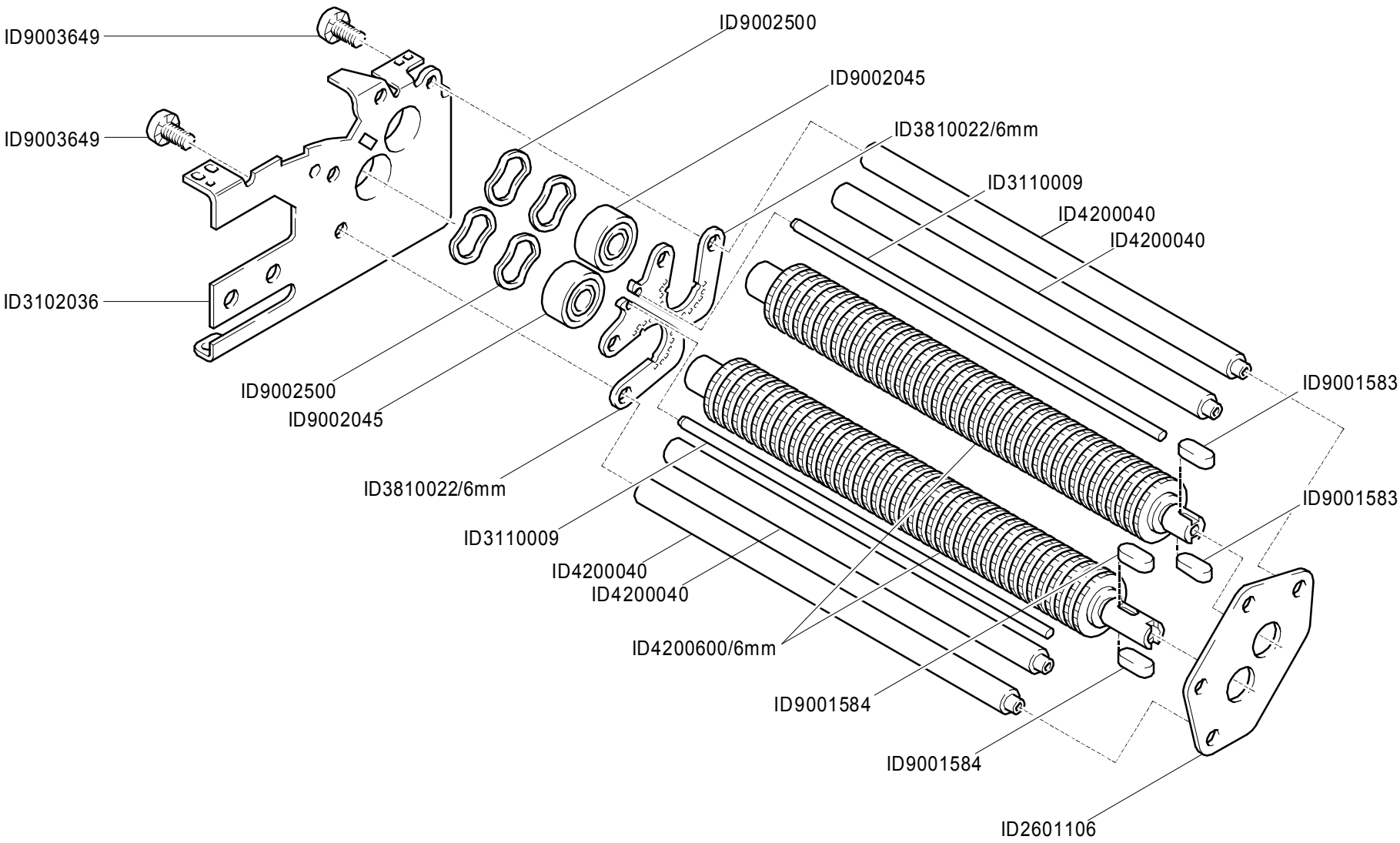
ID9003649
ID9003649
ID3102036
ID9002500
ID9002045
ID3810022/6mm
ID3110009
ID4200040
ID4200040
ID9002500
ID9002045
ID3810022/6mm
ID3110009
ID4200040
ID4200040
ID4200600/6mm
ID9001584
ID9001584
ID9001583
ID9001583
ID2601106

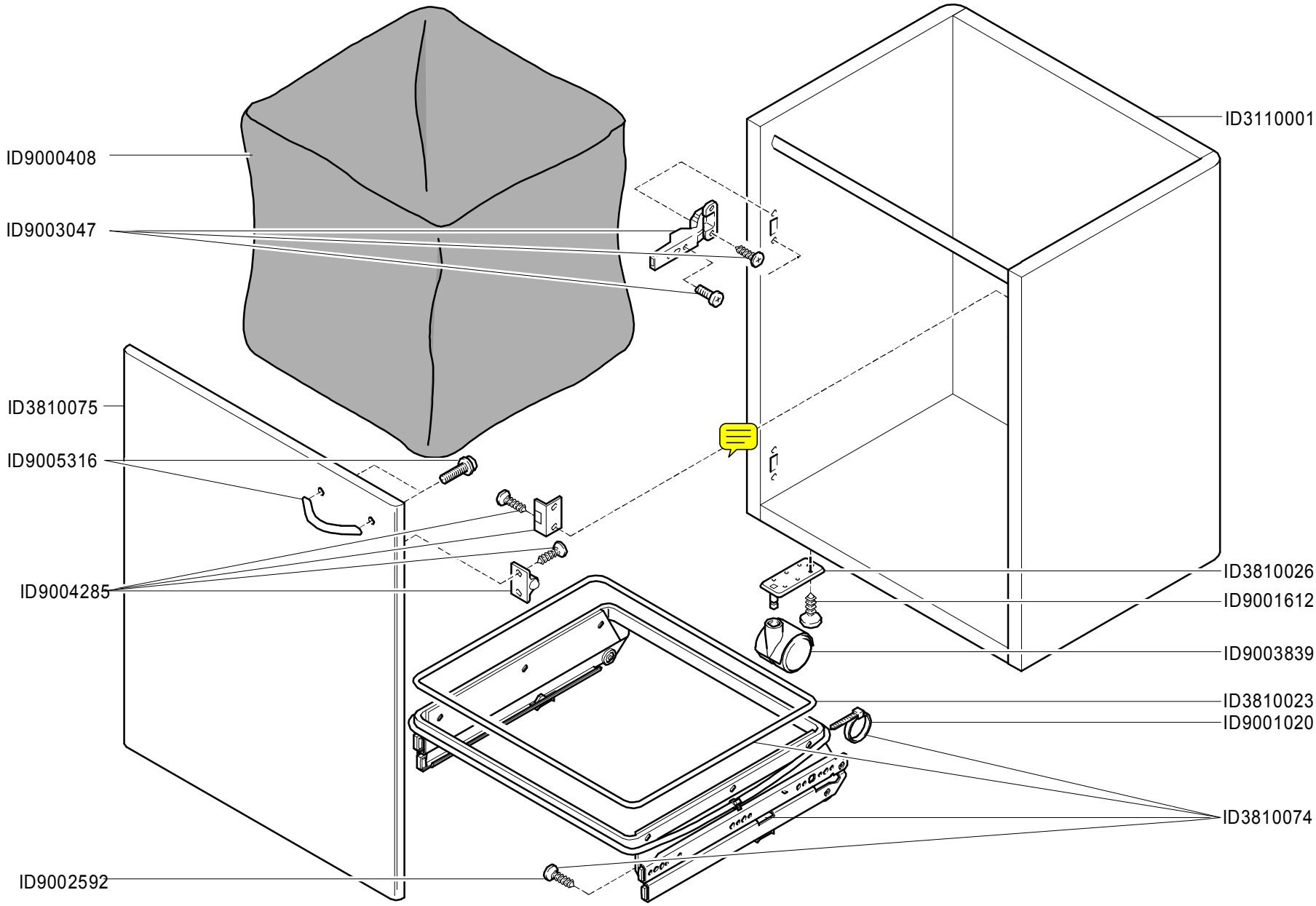
ID9000408
ID9003047
ID3810075
ID9005316
ID9004285
ID9002592
ID3110001
ID3810026
ID9001612
ID9003839
ID3810023
ID9001020
ID3810074

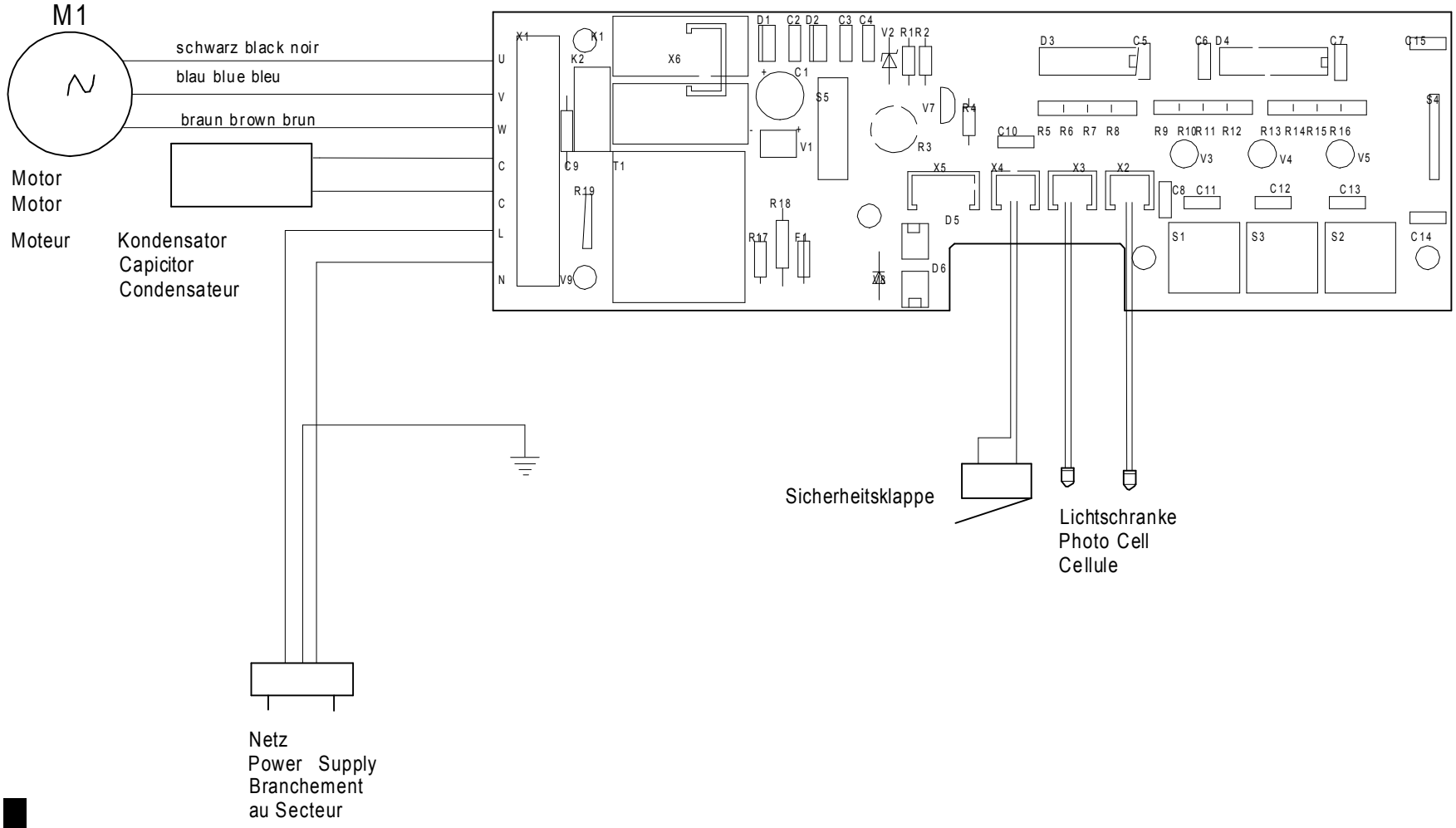
M1
schwarz black noir
blau blue bleu
braun brown brun
Motor
Motor
Moteur
Kondensator
Capicitor
Condensateur
U
V
W
C
C
L
N
X1
K1
K2
X6
C9
T1
R19
V9
D1
C2
D2
C3
C4
C1
S5
V1
R18
R17
F1
V2
R1
R2
V7
R4
R3
D5
D6
X5
X4
X3
X2
D3
C5
C6
D4
C7
C15
C10
R5
R6
R7
R8
R9
R10
R11
R12
R13
R14
R15
R16
V3
V4
V5
C8
C11
C12
C13
S4
S1
S3
S2
C14
Sicherheitsklappe
Lichtschranke
Photo Cell
Cellule
Netz
Power Supply
Branchement
au Secteur

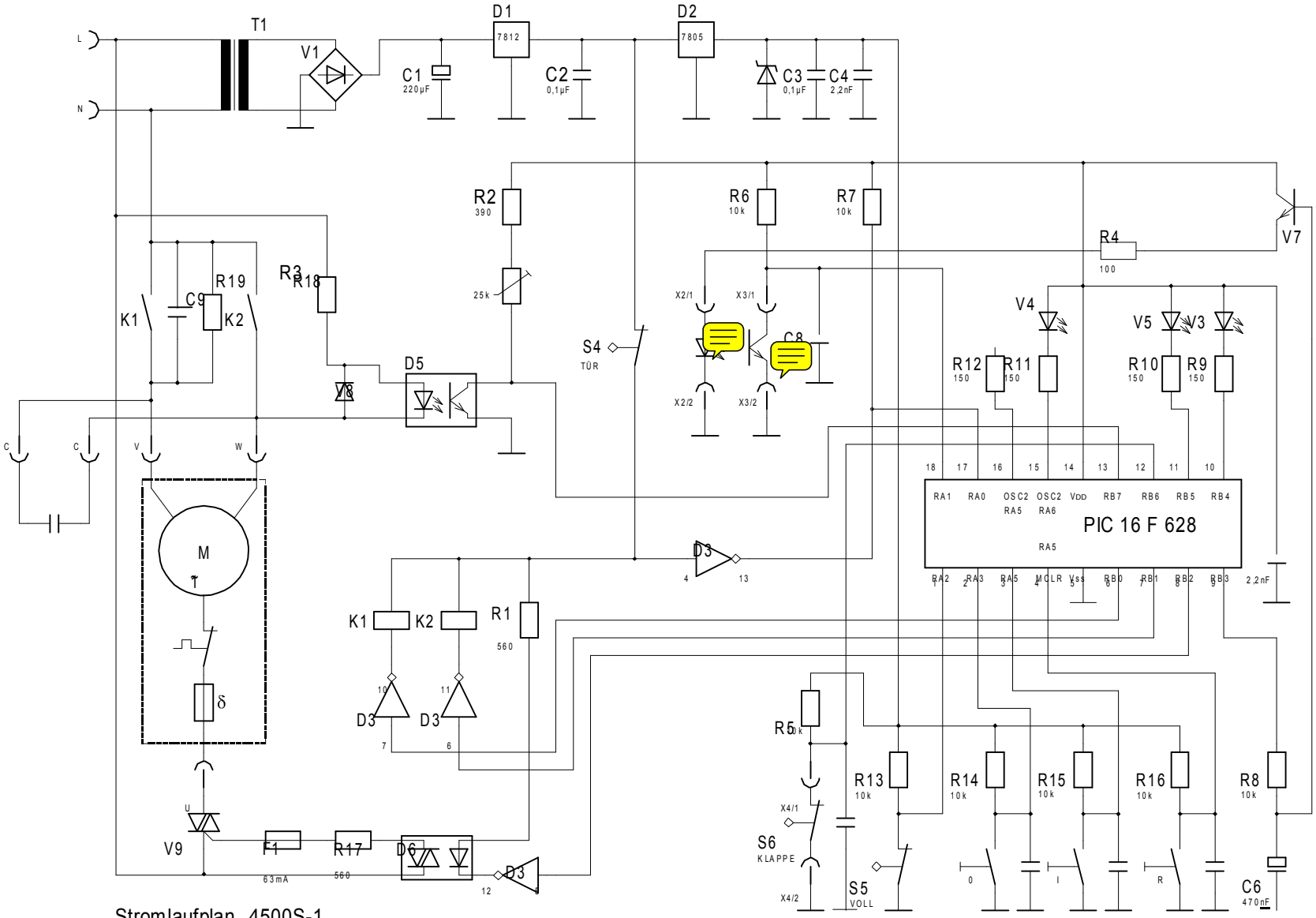

Stromlaufplan 4500S-1
schema de
circuit électrique 4500S-1
wiring diagram 4500S-1