3870M PARTS LIST

Revised 04/18/06

GBC IS AN ACCO BRANDS COMPANY

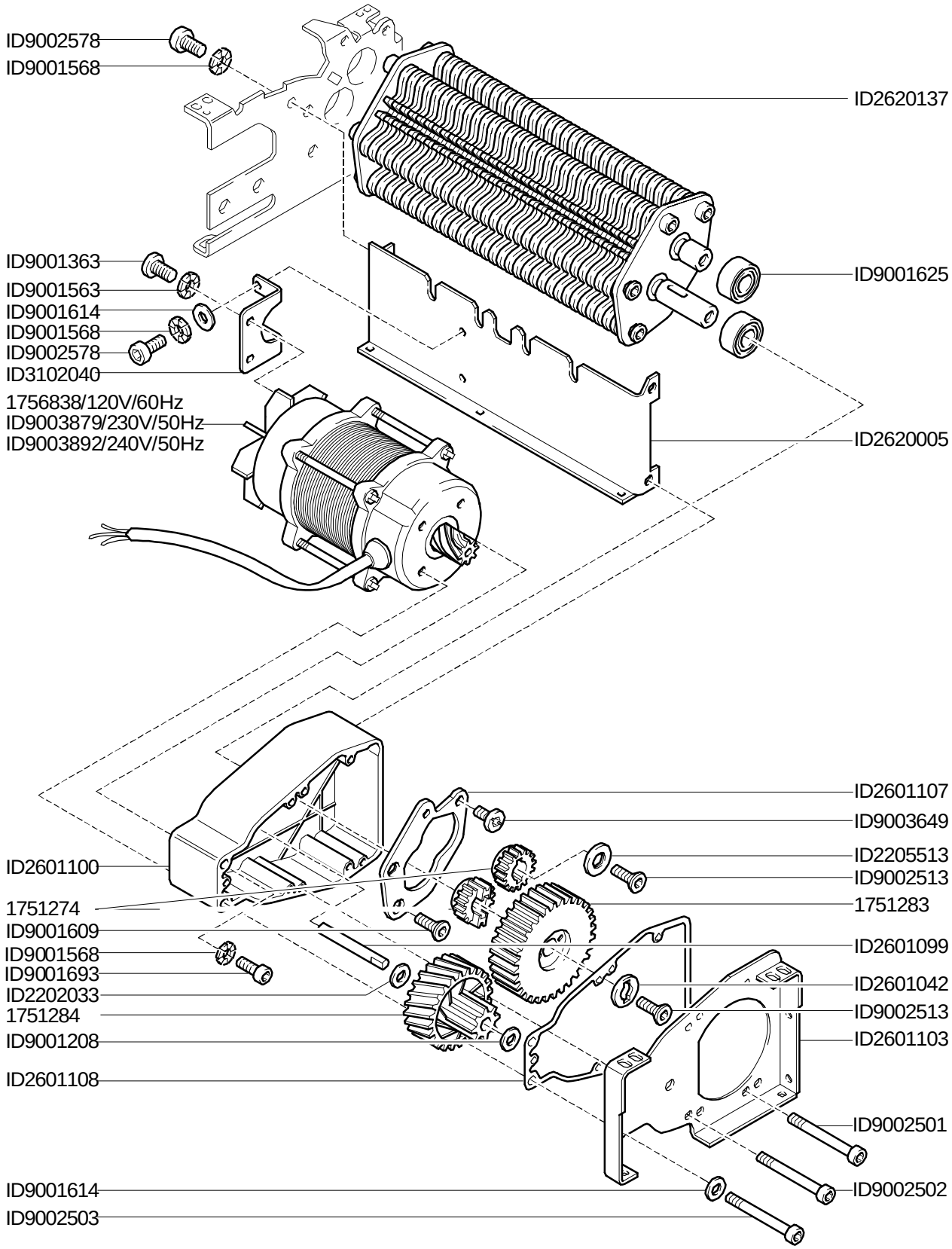
ID9002578
ID9001568
ID2620137
ID9001363
ID9001563
ID9001614
ID9001568
ID9002578
ID3102040
ID9001625
1756838/120V/60Hz
ID9003879/230V/50Hz
ID9003892/240V/50Hz
ID2620005
ID2601107
ID9003649
ID2205513
ID9002513
ID2601100
1751274
1751283
ID9001609
ID2601099
ID9001568
ID9001693
ID2202033
ID2601042
1751284
ID9002513
ID9001208
ID2601103
ID2601108
ID9002501
ID9001614
ID9002502
ID9002503

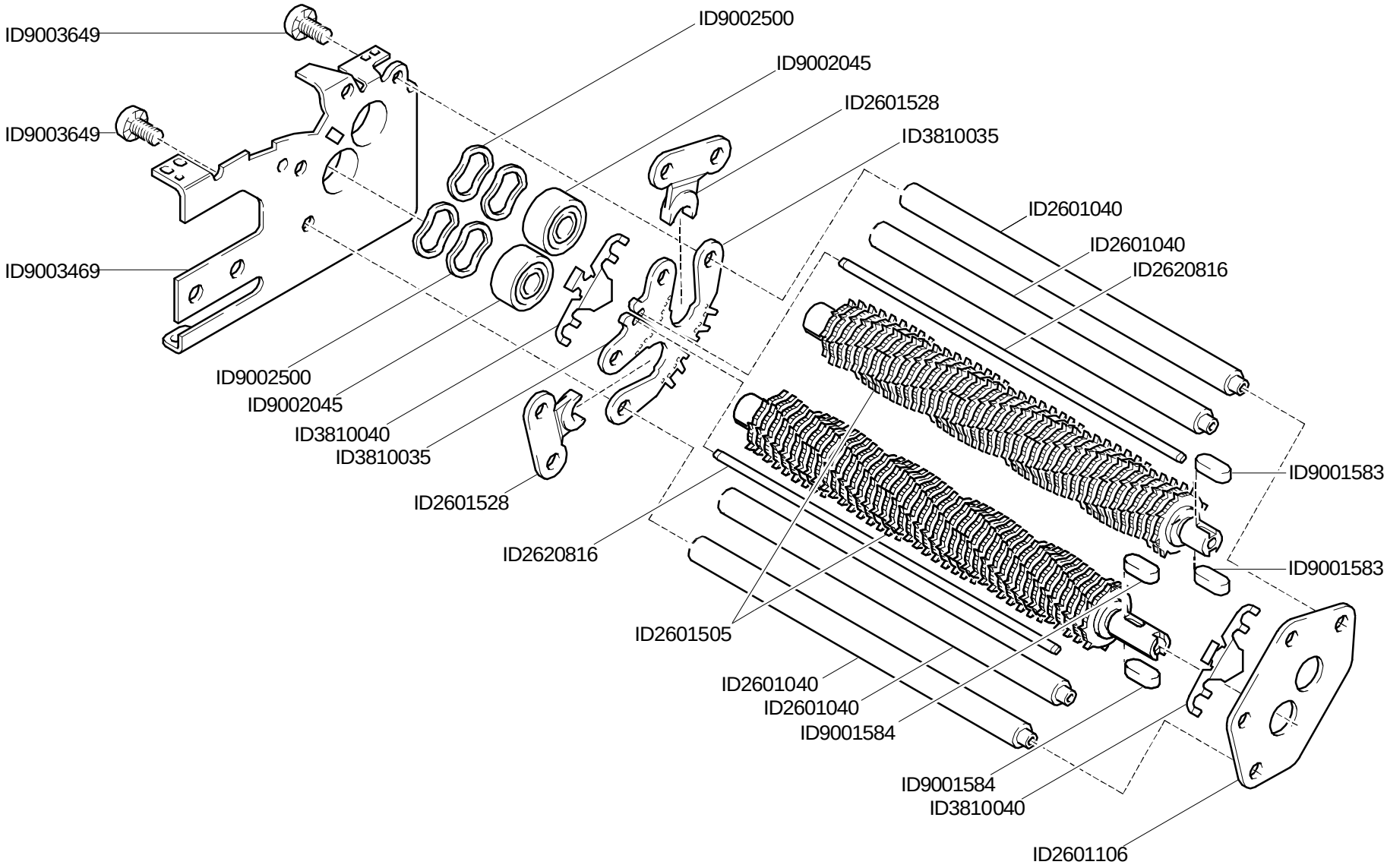
ID9003649
ID9003649
ID9003469
ID9002500
ID9002045
ID2601528
ID3810035
ID2601040
ID2601040
ID2620816
ID9002500
ID9002045
ID3810040
ID3810035
ID2601528
ID2620816
ID9001583
ID9001583
ID2601505
ID2601040
ID2601040
ID9001584
ID9001584
ID3810040
ID2601106

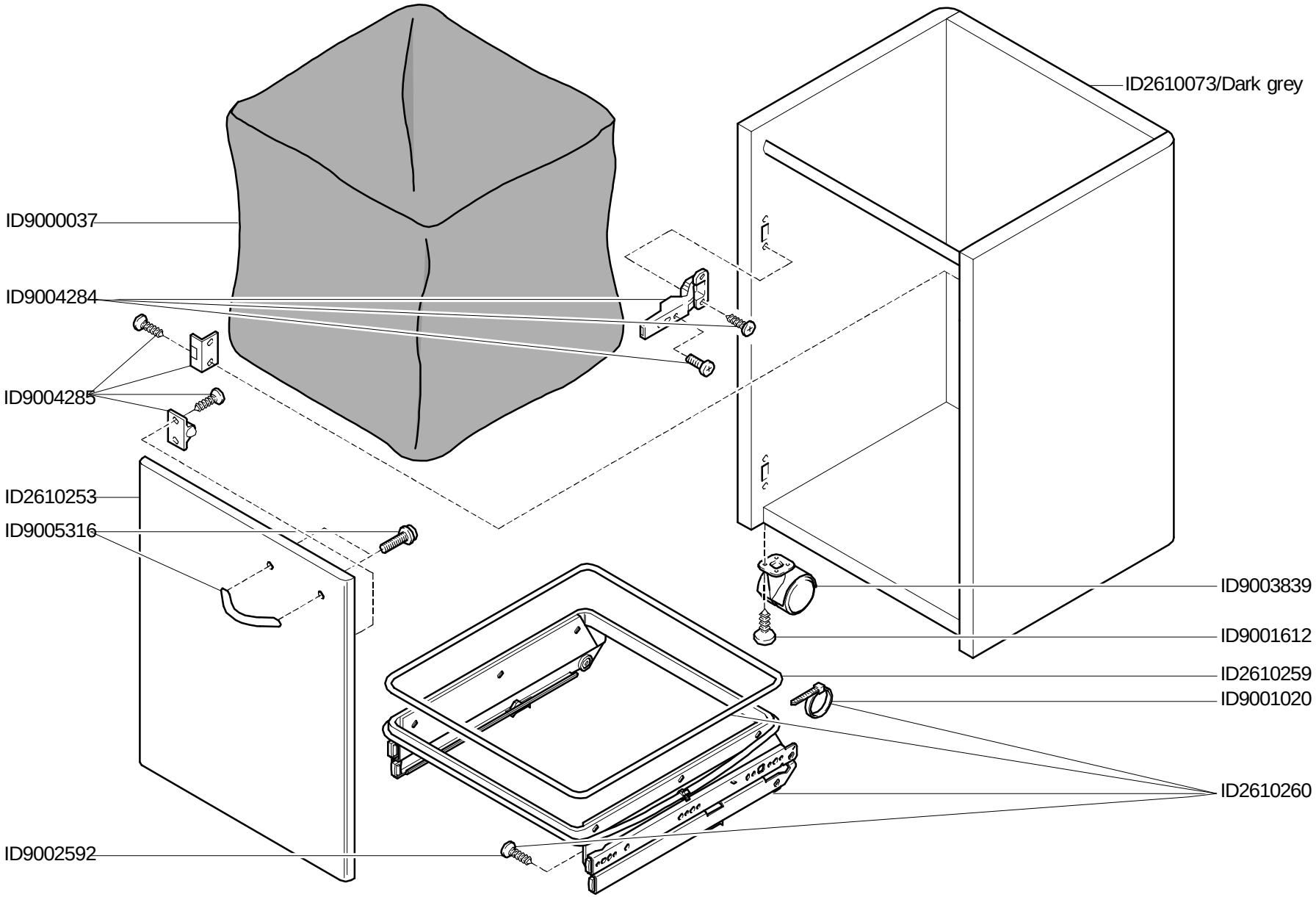
ID2610073/Dark grey
ID9000037
ID9004284
ID9004285
ID2610253
ID9005316
ID9003839
ID9001612
ID2610259
ID9001020
ID2610260
ID9002592

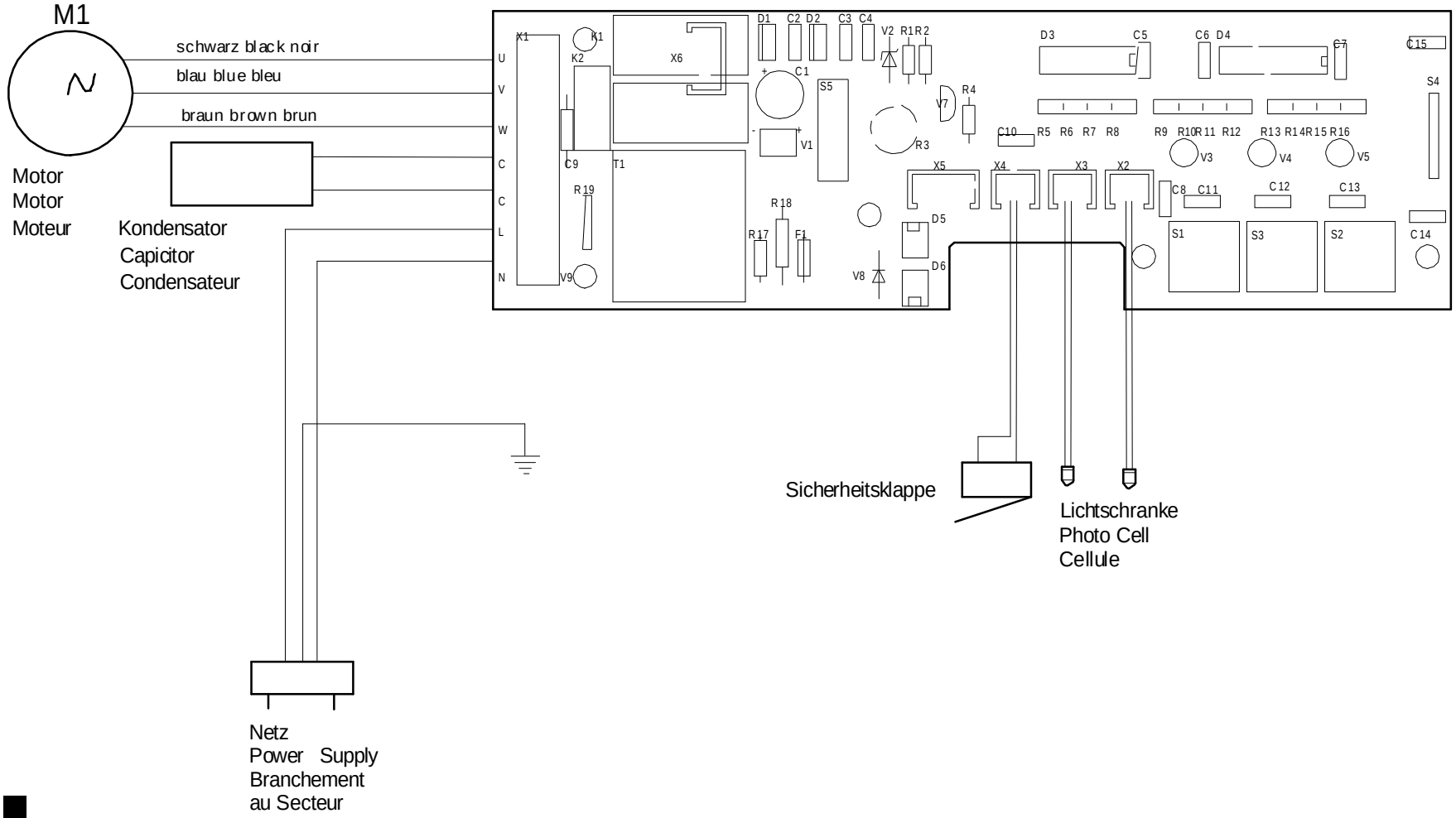
M1
schwarz black noir
blau blue bleu
braun brown brun
Motor
Motor
Moteur
Kondensator
Capicitor
Condensateur
U
V
W
C
C
L
N
X1
K1
K2
C9
T1
R19
V9
X6
D1
C2
D2
C3
C4
C1
V1
S5
V2
R1
R2
R3
V7
R4
R18
R17
F1
V8
D5
D6
X5
X4
X3
X2
D3
C5
C6
D4
C7
C15
S4
C10
R5
R6
R7
R8
R9
R10
R11
R12
R13
R14
R15
R16
V3
V4
V5
C8
C11
C12
C13
S1
S3
S2
C14
Sicherheitsklappe
Lichtschranke
Photo Cell
Cellule
Netz
Power Supply
Branchement
au Secteur

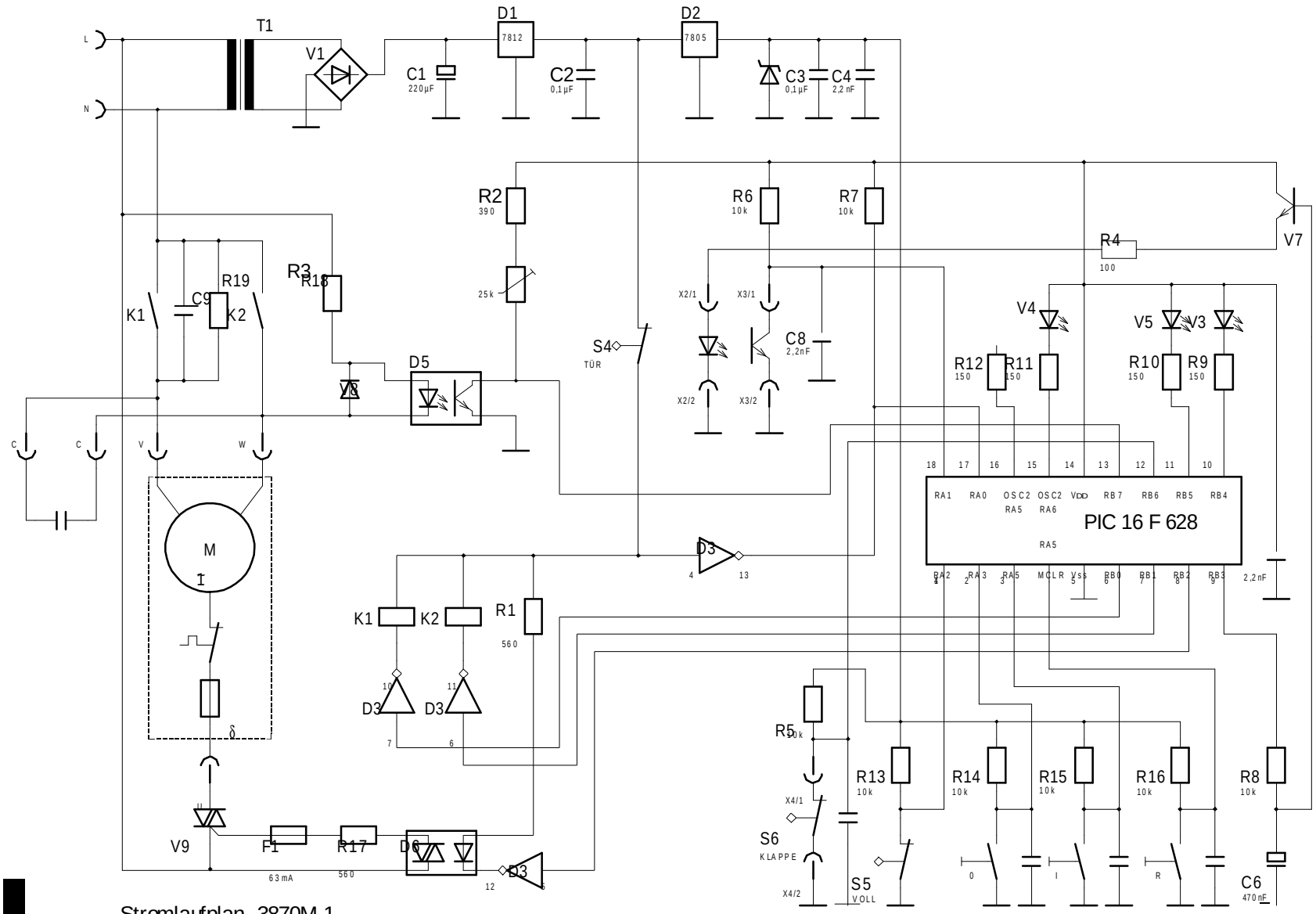

Stromlaufplan 3870M-1
schema de
circuit électrique 3870M-1
wiring diagram 3870M-1