2230S-1/2250X-1 PARTS LIST

GBC IS AN ACCO BRANDS COMPANY

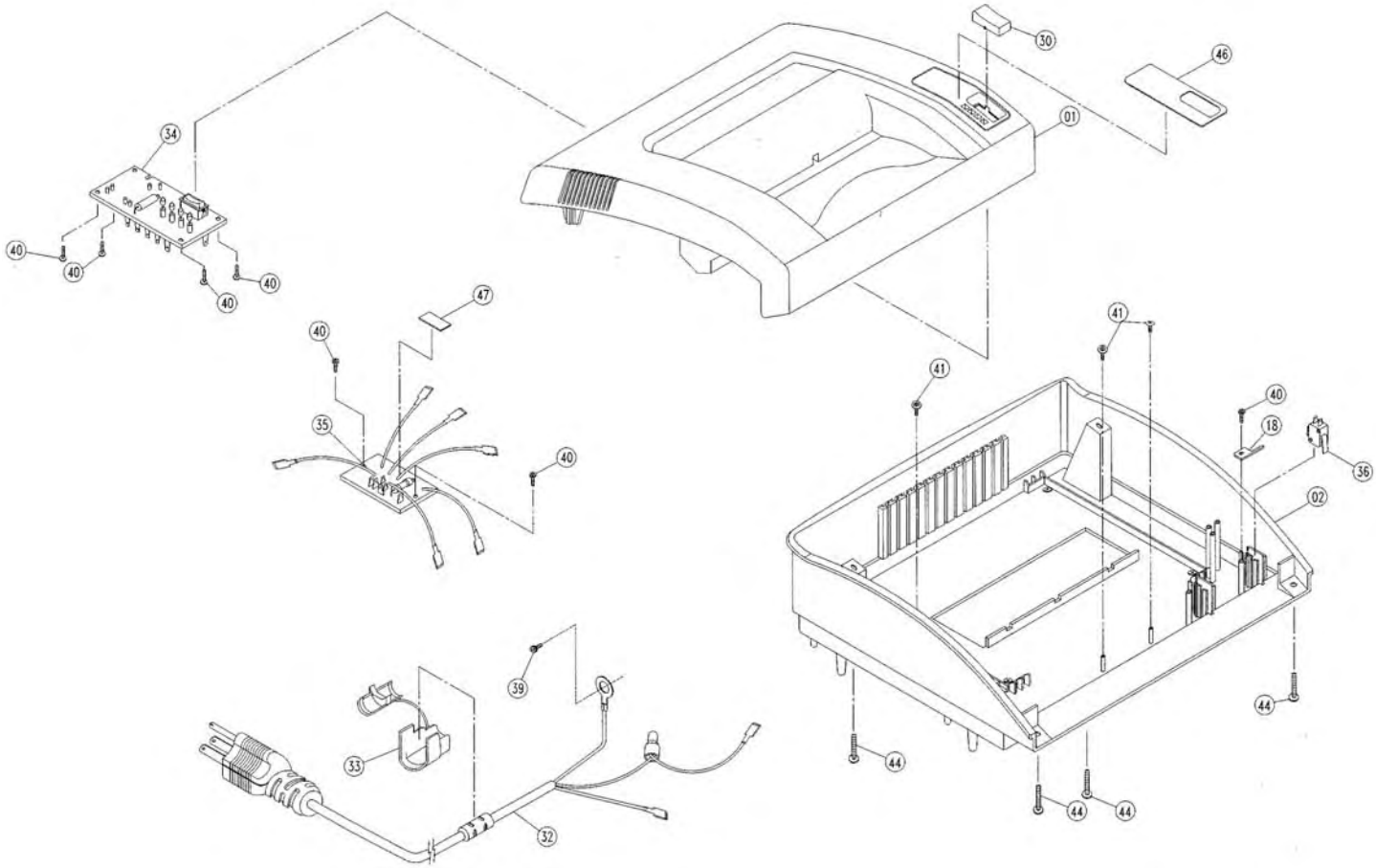
30
46
01
34
40
40
40
40
47
40
41
41
40
18
36
35
40
02
39
44
33
44
44
44
32

*	1751726	KL7350000A	Warning Label	1	1
46	1751900	XF2500000A	Name Plate	1	1
44	-REF-	S1VKF00000	Screw 5X16 Tapping	8	8
41	-REF-	S1DJN0000F	3X8 With Washer	3	3
40	-REF-	S1RYN00000	Screw #3X8 Tap	14	14
39	-REF-	S1VGF0000E	Screw M4X8 P Gear Washer	10	10
36	6202038	ESWC02270X	Micro Switch, Door	1	1
35	1751726	ASYMO7421A	Fuse PCB		1
35	1751901	ASYMO7149X	Fuse PCB	1	
34	1751727	ASYMO7148A	PCB, Control		1
34	1751717	ASYMO7367X	PCB, Control	1	
33	1751902	XF0400000X	Strain Relief Bushing	1	1
32	1751903	EACC0351SA	AC Power Cord	1	
30	1751904	PW040A068A	Switch Cap	1	1
18	1755732	MN2800000X	Switch Fixer	1	1
2	1751905	PV241A18ZA	Bottom-Housing	1	1
1	1751906	PV230A1E1B	Housing-Top	1	1
ITEM	**PRT NO.**	**REF. NO.**	**DESCRIPTION**	**115V**	**230V**

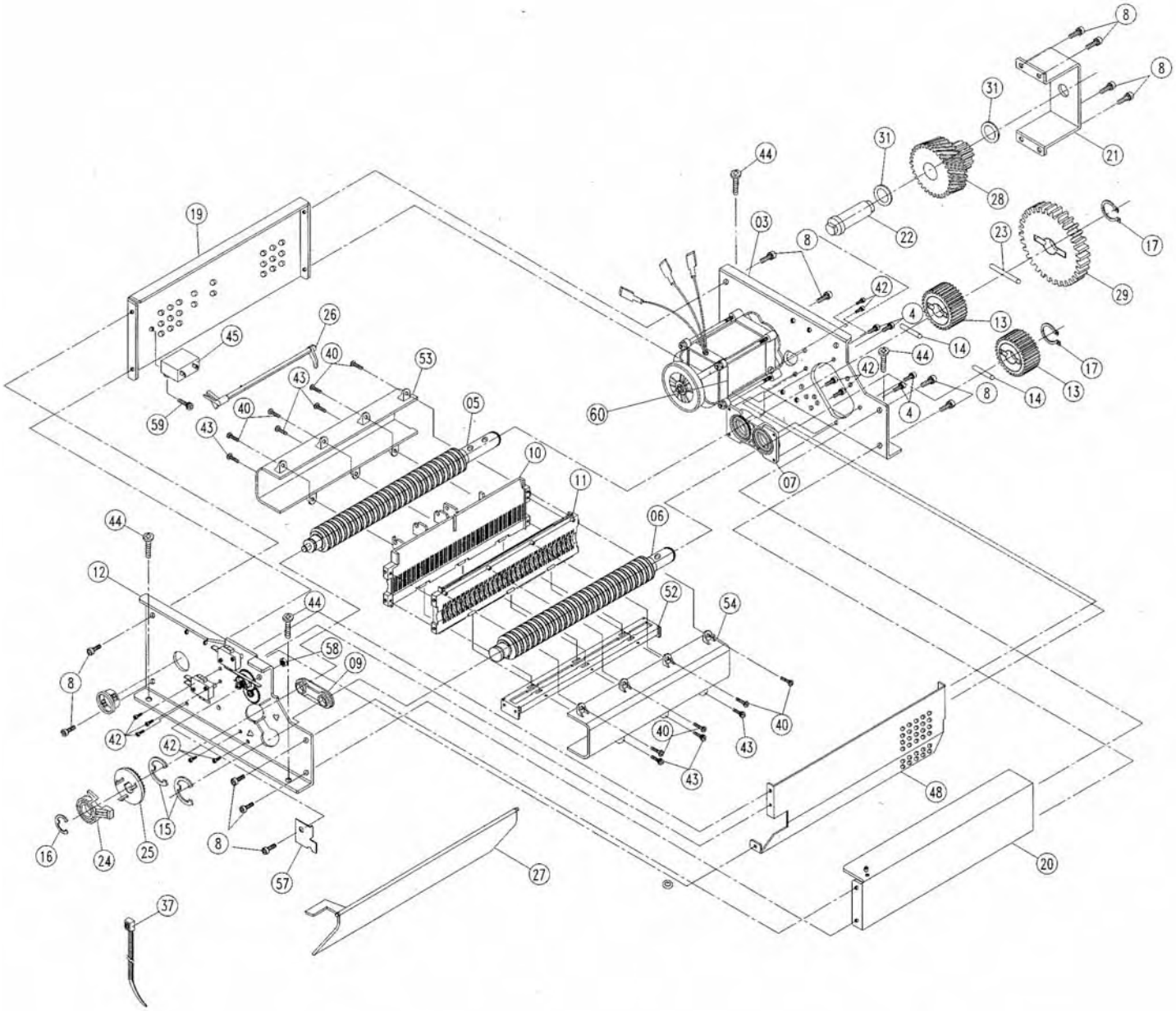
8
8
31
31
21
44
28
19
03
22
8
23
17
42
29
26
4
13
45
40
14
53
44
17
42
43
13
40
8
14
59
05
60
4
43
10
07
11
44
06
12
52
54
44
58
09
8
40
42
40
43
42
43
48
15
16
24
25
8
57
27
20
37

60	1751729	EMTR01040A	2P AC Motor		1
60	1751718	EMTR01010X	2P AC Motor	1	
59	1755721	S1W4F0000E	Screw M4x10 P Gear Washer	1	1
58	1755734	MO140F000X	Nut M 5x4t	1	1
57	1755733	MO1300000X	Trigger Holder	1	1
54	1751926	PW240XXXXX	Knife Cover-Front	1	1
53	1751925	PW250XXXXX	Knife Cover-Rear	1	1
52	1751924	ML6300000X	Paper Guide-Bracket	1	1
48	1755731	MN1500000X	Motor Shield	1	1
45	1751728	ECAP606600	Capacitor 9uf/400VAC		1
45	1751923	ECAP60310X	Capacitor 30uf/250VAC	1	
43	-REF-	S1VHF0000E	Screw M3X8 P Gear Washer	6	6
42	1755741	S7SLB0000S	Screw M3x8 Spring Washer	9	4
37	-REF-	EOTH02210X	Cable Tie	5	5
31	-REF-	XJ6900000X	Spacer 12.2 T=0.5	2	2
29	1751938	PV880D7XXX	Spur Gear 50T	2	2
28	1751766	PV870H5XXX	Gear -A 53T+11T	1	1
27	1751922	PV300XXXXX	Flap	1	1
26	1751716	PV290XXXXX	Auto Parts	1	1
25	6180021	PH820HOXXX	Auto Gear 32T	1	1
24	1755737	PARS0XXXXX	Rev Cam	1	1
23	1750713	MM0600000X	Knife Shaft Pin 6x40mm	1	1
22	1751920	ML6500000X	Gear Shaft	1	1
21	1751919	ML6200000X	Gear Holder	1	1
20	1751918	ML6100000X	Plate-D	1	1
19	1751917	ML5000000X	Plate-C	1	1
17	-REF-	MC5000000X	#15 C-Ring	2	2
16	-REF-	MC4700000X	#5 E-Ring	1	1
15	-REF-	MC4600000X	#12 E-Ring	2	2
14	1751915	MC3400000X	Knife Pin	2	2
13	6180029	MC1000000X	Spur Gear-A 20T	1	1
12	1755728	ML7200000C	Plate-A	1	1
11	1751913	PV260XXXXX	Paper Guide - Front	1	1
10	1751912	PV250XXXXX	Paper Guide - Rear	1	1
9	1755735	MP2800000X	Bushing	1	1
8	1755738	S7SJB0000S	Screw M5x10 Spring Washer	13	13
7	1755722	ASYM05832A	Bearing Assy	1	1
6	1755726	ASYP08385X	4mm Knife Shaft (B) Assy	1	1
5	1755725	ASYP08384X	4mm Knife Shaft (A) Assy	1	1
4	1755739	S7SKB0000S	Screw M4x8 Spring Washer	4	4
3	1755729	ML7300000C	Plate-B	1	1
ITEM	**PRT NO.**	**REF. NO.**	**DESCRIPTION**	**115V**	**230V**

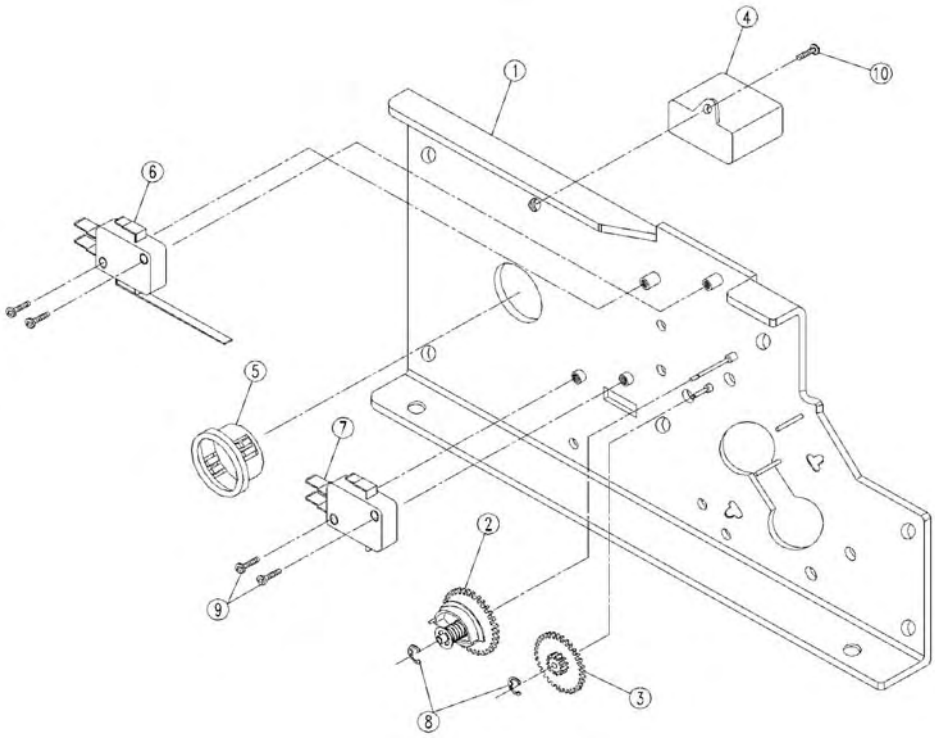

10	-REF-	S1VGF0000X	Screw M4X8P Gear Washer	1	1
9	-REF-	S1CFNOOOOX	M3 X 14	2	2
8	-REF-	MA8400000X	#1.5 E-Ring	2	2
7	1751930	ESWCO2280X	Micro Switch	1	1
6	1750294	ESWC03000X	Trigger Switch	1	1
5	1751929	XF1400000X	Snap Bushings	1	1
4	1751728	ECAP606600	Capacitor 9uF/250VAC		1
4	1751923	ECAP60310X	Capacitor 30uF/250VAC	1	
3	1750308	PC370HOXXX	Gear (A)	1	1
2	1755724	ASYMO8395A	Auto Cam Ass'y	1	1
1	1755728	ML7200000C	Plate-A	1	1
ITEM	**PRT NO.**	**REF. NO.**	**DESCRIPTION**	**115V**	**230V**

2250X

PARTS LIST

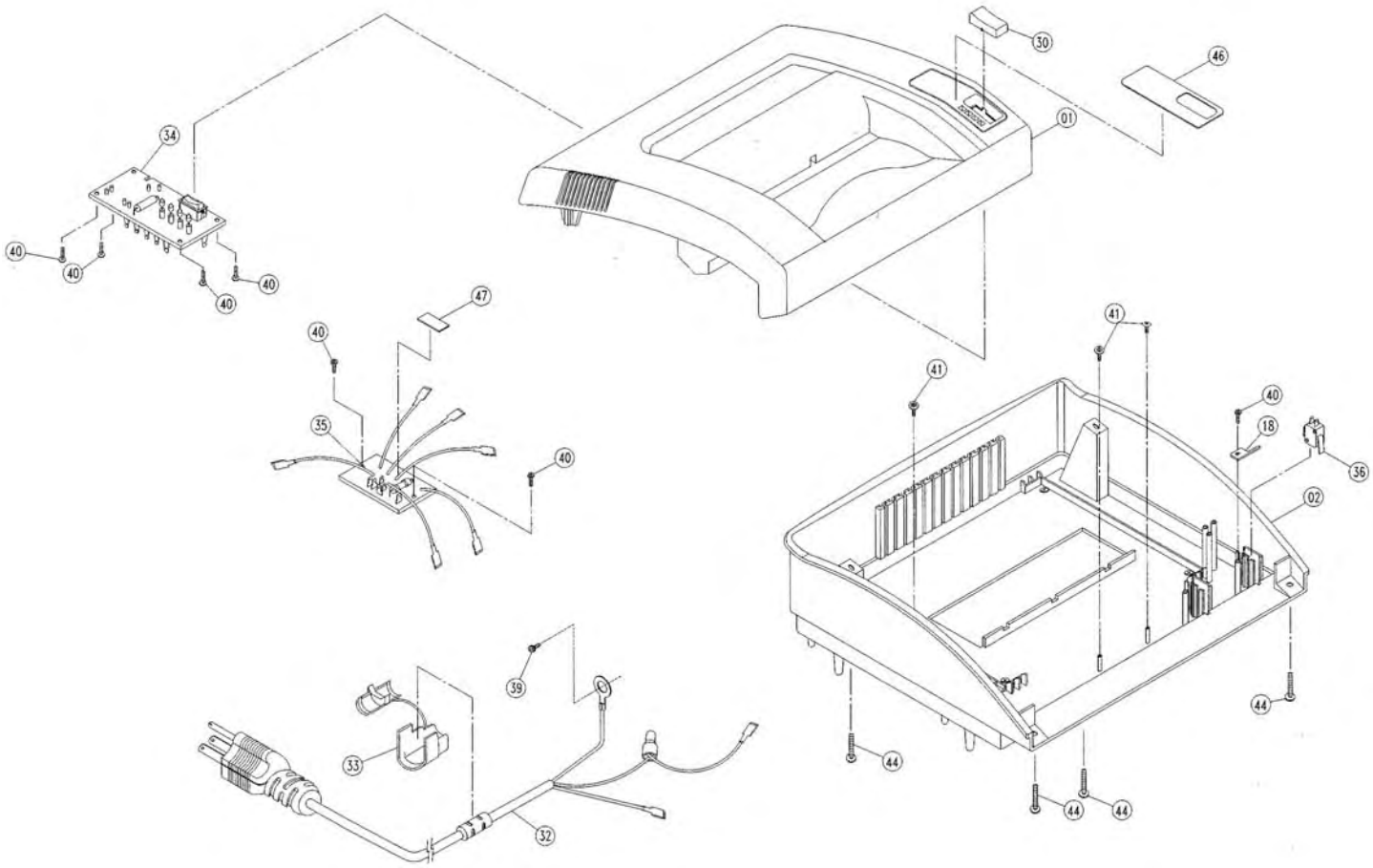
30
46
01
34
40
40
40
40
47
40
41
41
40
18
35
40
36
02
39
44
33
44
44
44
32

*	1751726	KL7350000A	Warning Label	1	1
46	1751931	XF2501000X	Name Plate	1	1
44	-REF-	S7SLB0000S	Screw M3X8 Spring Washer	5	5
43	-REF-	S1VKF00000	Screw 5X16 Tapping	8	8
41	-REF-	S1DJN0000F	3X8 With Washer	3	3
40	-REF-	S1RYN00000	Screw #3X8 Tap	7	7
39	-REF-	S1VGF0000E	Screw M4X8 P Gear Washer	1	1
36	6202038	ESWC02270X	Micro Switch, Door	1	1
35	1751726	ASYMO7421A	Fuse PCB		1
35	1751901	ASYMO7149X	Fuse PCB	1	
34	1751727	ASYMO7148A	PCB, Control		1
34	1751717	ASYMO7367X	PCB, Control	1	
33	1751902	XF0400000X	Strain Relief Bushing		1
32	1751704	ASYMO7430B	AC Power Cord	1	
30	1751904	PW040A068A	Switch Cap	1	1
18	1755732	MN2800000X	Switch Fixer	1	1
2	1751932	PV240XXXXX	Bottom-Housing	1	1
1	1751906	PV230A1E1B	Housing-Top	1	1
ITEM	**PRT NO.**	**REF. NO.**	**DESCRIPTION**	**115V**	**230V**

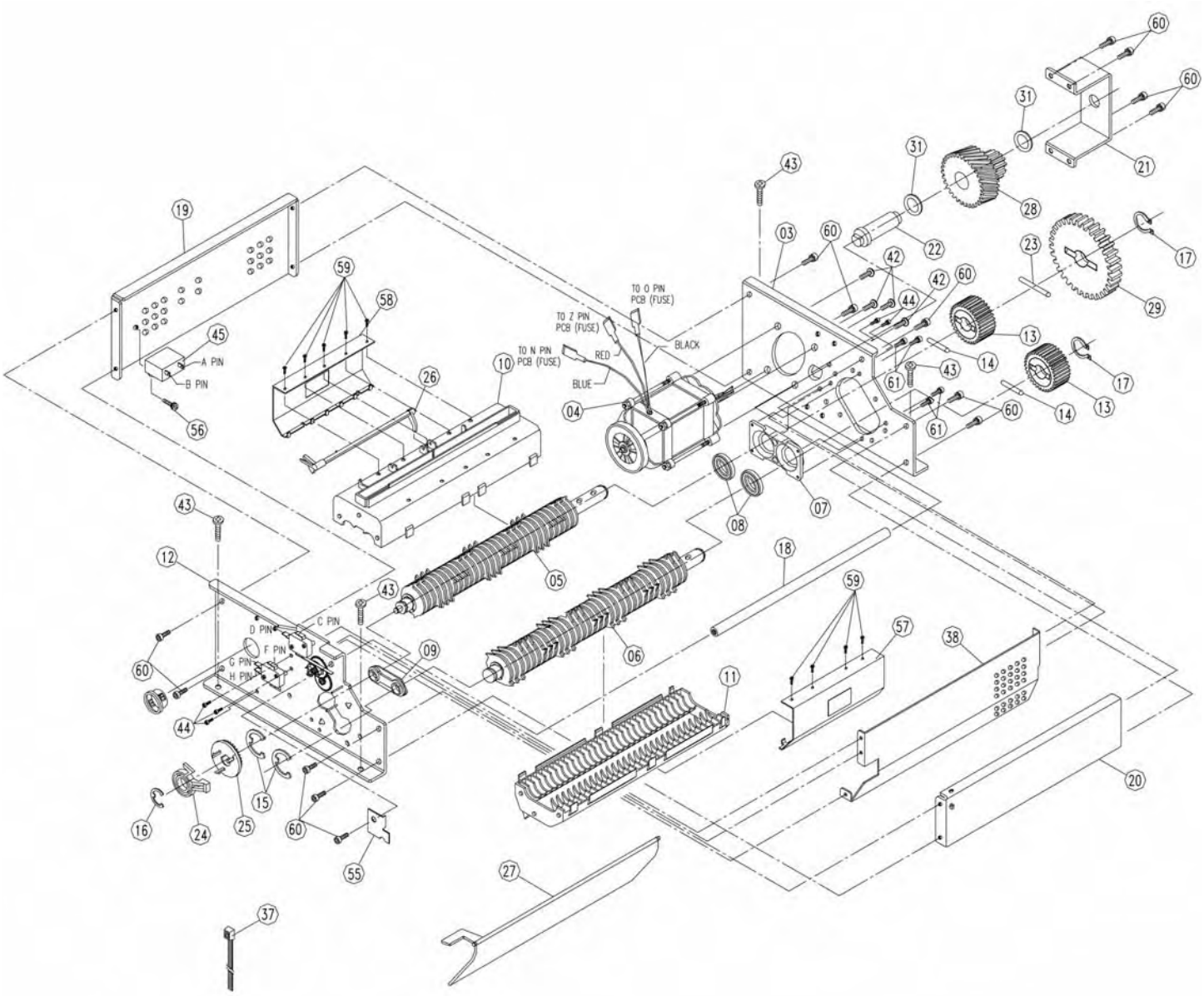
TO O PIN
PCB (FUSE)
TO Z PIN
PCB (FUSE)
TO N PIN
PCB (FUSE)
BLACK
RED
BLUE
A PIN
B PIN
D PIN
C PIN
F PIN
G PIN
H PIN

60	-REF-	S75JB0000S	Screw M5X10 Spring Washer	14	14
59	-REF-	S1RYN00000	Screw #3X8 Tap	9	9
58	1751775	MP7510000X	Holder-Rear	1	1
57	1751774	MP7500000X	Holder-Front	1	1
55	1755733	MO130F000X	Trigger Holder	1	1
45	1751736	ECAP606700	Capacitor 7.5uf/400VAC		1
45	1751947	ECAP60700X	Capacitor 20uf/250VAC	1	
43	-REF-	S1VKF00000	Screw #5X16 B Tapping	8	8
42	-REF-	S1VFF0000E	Screw #5X10 B Gear Washer	4	4
31	-REF-	XJ6900000X	Spacer 12.2 t = 0.3	2	2
29	1751938	PV880D7XXX	Spur Gear 50T	1	1
28	1751766	PV870H5XXX	Gear -A 53T+11T	1	1
27	1751922	PV300XXXXX	Flap	1	1
26	1751716	PV290XXXXX	Auto Parts	1	1
25	6180021	PH820HOXXX	Auto Gear 32T	1	1
24	1751764	PARS0XXXXX	Rev Cam	1	1
23	1750713	MM0600000X	Knife Shaft Pin 6X40mm	1	1
22	1751920	ML6500000X	Gear Shaft	1	1
21	1751919	ML6200000X	Gear Holder	1	1
20	1751918	ML6100000X	Plate-D	1	1
19	1751917	ML5000000X	Plate-C	1	1
18	1751916	MIA4800000X	Side Plate Support	1	1
17	-REF-	MC5000000X	#15 C-Ring	2	2
16	-REF-	MC4700000X	#5 E-Ring	1	1
15	-REF-	MC4600000X	#12 E-Ring	2	2
14	1751915	MC3400000X	Shaft Pin	2	2
13	6180029	MC1000000X	Spur Gear-A 20T	2	2
12	1751939	ASYMO5833X	Plate-A Ass'y	1	1
11	1751937	PV280XXXXX	Paper Guide - Bottom	1	1
10	1751936	PV270XXXXX	Paper Guide - Top	1	1
9	1751765	MP2800000X	Bushing	1	1
8	1751911	MM0900000X	Bearing 6002	2	2
7	1751910	ML6600000X	Bearing Holder	1	1
5	1751768	ASMY08387X	Cross Cutter (B) Assy	1	1
5	1751769	ASYMO8386X	Cross Cutter (A) Assy	1	1
4	1751737	EMTR01030A	2P AC Motor		1
4	1751767	EMTR00990X	2P AC Motor	1	
3	1751738	ASYMO7044A	Plate-B		1
3	1751933	ML7400000X	Plate-B	1	
ITEM	**PRT NO.**	**REF. NO.**	**DESCRIPTION**	**115V**	**230V**

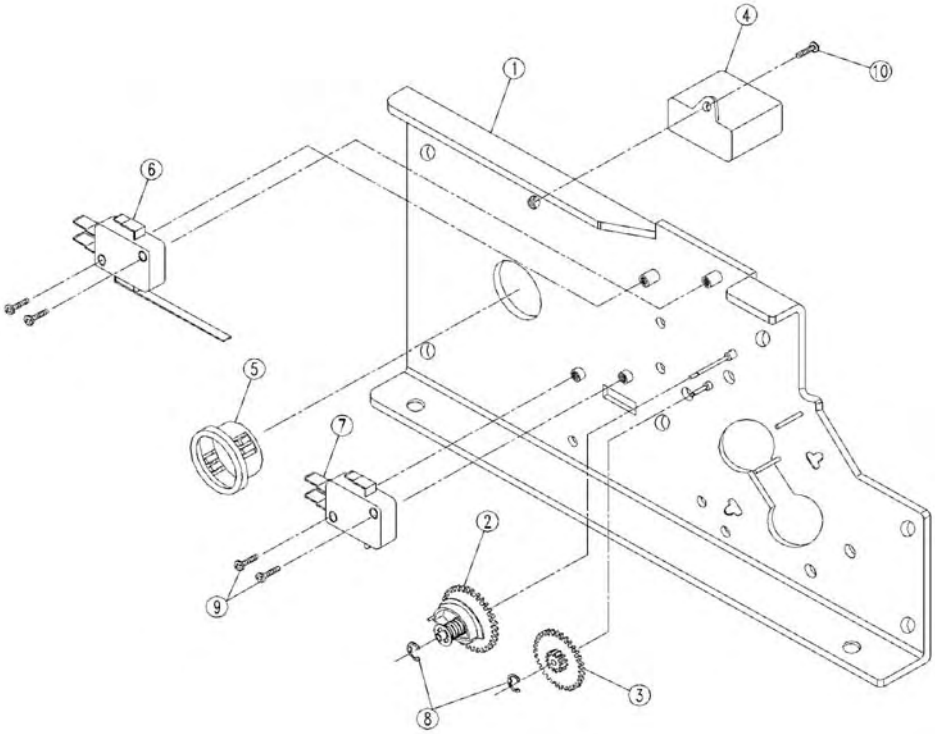

10	-REF-	S1W4F0000E	Screw M4X10 P Gear Washer	1	1
9	-REF-	S1CFNOOOOX	M3 X 14	2	2
8	-REF-	MA8400000X	#1.5 E-Ring	2	2
7	1751930	ESWCO2280X	Micro Switch	1	1
6	1750294	ESWC03000X	Trigger Switch	1	1
5	1751929	XF1400000X	Snap Bushings	1	1
4	1751736	ECAP606700	Capacitor 7.5uF/400VAC		1
4	1751947	ECAP60700X	Capacitor 20uF/250VAC	1	
3	1750308	PC370HOXXX	Gear (A)	1	1
2	1751928	ASYMO2755X	Auto Cam Ass'y	1	1
1	1755728	ML7200000C	Plate-A	1	1
ITEM	**PRT NO.**	**REF. NO.**	**DESCRIPTION**	**115V**	**230V**

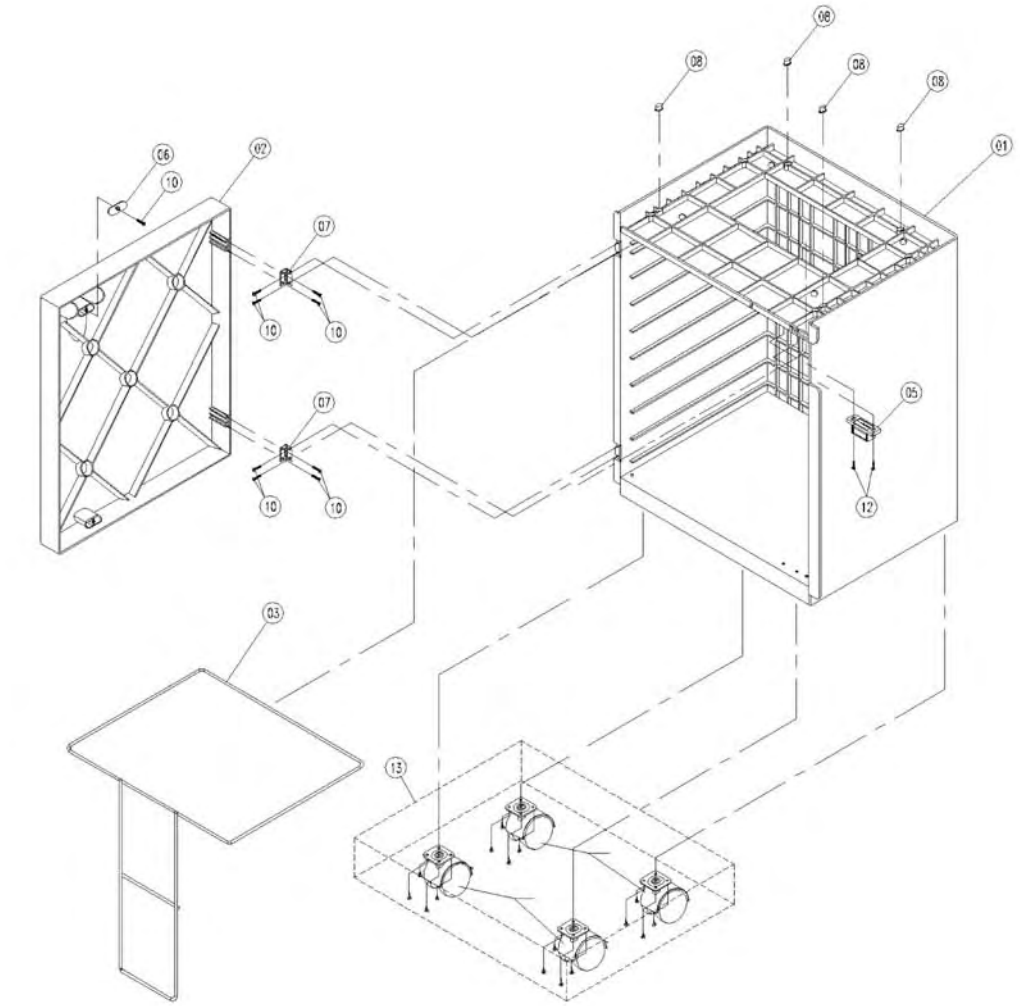

				QTY	
13	1751707	ASYP07137A	Castor Set	1	1
12	-REF-	S1VJN0000X	Screw 3X12 Washer Tapping	2	2
*	-REF-	S1VIF0000X	Screw M4X14	4	4
10	-REF-	S1VDB0000X	Screw #3X12 Type P F Black	9	9
8	1751946	XF1100000A	Cushion	4	4
7	1751945	MH1300000A	Hinge	2	2
6	1751944	MM1000000A	Magnet Plate	2	2
5	1751943	XF1500000A	Magnet	2	2
*	1751942	MN210Z000A	Support Bar	2	2
3	1751706	ML640L900A	Bag Rim	1	1
2	1751941	PV830JOE1A	Door	1	1
1	1751940	ASYM05835A	Cabinet Ass'y	1	1
ITEM	**PRT NO.**	**REF. NO.**	**DESCRIPTION**	**115V**	**230V**

* Not shown

2230S-1

1751926	PW240XXXXX	Knife Cover-Front	1	1
1751925	PW250XXXXX	Knife Cover-Rear	1	1
1751913	PV260XXXXX	Paper Guide - Front	1	1
1751912	PV250XXXXX	Paper Guide - Rear	1	1
6180029	MC1000000X	Spur Gear-A 20T	2	2
1751706	ML640L900A	Bag Rim	1	1
1751707	ASYP07137A	Castor Set	1	1
1751938	PV880D7XXX	Spur Gear 50T (2230S)	1	1
1751766	PV870H5XXX	Gear -A 53T+11T (2230S)	2	2
1751716	PV290XXXXX	Auto Parts	1	1
1751727	ASYMO7148A	PCB, Control		1
1751717	ASYMO7367X	PCB, Control	1	
1751729	EMTR01040A	2P AC Motor (2230S)		1
1751718	EMTR01010X	2P AC Motor (2230S)	1	
1751930	ESWCO2280X	Micro Switch	1	1
1750294	ESWC03000X	Trigger Switch	1	1
PRT NO.	**REF. NO.**	**DESCRIPTION**	**115V**	**230V**

2250X

1751937	PV280XXXXX	Paper Guide - Bottom	1	1
1751936	PV270XXXXX	Paper Guide - Top	1	1
1751768	ASMY08387X	Cross Cutter (B) Assy	1	1
1751769	ASYMO8386X	Cross Cutter (A) Assy	1	1
6180029	MC1000000X	Spur Gear 20T	2	2
1751706	ML640L900A	Bag Rim	1	1
1751707	ASYP07137A	Castor Set	1	1
1751938	PV880D7XXX	Spur Gear 50T (2250X)	1	1
1751766	PV870H5XXX	Gear -A 53T+11T (2250X)	2	2
1751716	PV290XXXXX	Auto Parts	1	1
1751727	ASYMO7148A	PCB, Control		1
1751717	ASYMO7367X	PCB, Control	1	
1751737	EMTR01030A	2P AC Motor (2250X)		1
1751767	EMTR00990X	2P AC Motor (2250X)	1	
1751930	ESWCO2280X	Micro Switch	1	1
1750294	ESWC03000X	Trigger Switch	1	1
PRT NO.	**REF. NO.**	**DESCRIPTION**	**115V**	**230V**